Migrating from TDM (SDH) Based Telecommunications Transport Network to DWDM/OTN, to support both Operational Technology (OT) and Information Technology (IT) Traffic

Kgomotso Setlhapelo, PrEng, MSAIEE

Objective and Presentation Outline

- This presentation provides a view on a migration strategy from legacy TDM technologies to technologies capable of natively transporting both TDM and packet traffic, for Operational Technology and Information Technology application.
  - Requirements: OT/IT Services
  - Present Network Architecture/Service Model
  - Utility Transport Network Past and Current Situation- TDM Based Radio
  - Utility Transport Network Current and Near Future Situation- Hybrid TDM/Packet Radio
  - Utility Transport Network Past and Current Situation- TDM Based Optical Network
  - Utility Transport Network Current and Near Future Situation- DWDM/OTN
  - Future Network Architecture/ Service Model

Requirements: OT/IT Services

OT Services

- Condition Monitoring
- Disturbance Recording
- EAS
- Network Management
- Metering
- Network Automation
- Quality of Supply (QOS)
- Remote access
- Telecontrol
- Teleprotection
- Video (Surveillance, Conferencing)
- Voice (Mobile and Desktop)
- WAMS

IT Services

- Voice
- Video (Conferencing)
- Data Centre
- Business Applications (Email, ERP, etc)

Present Network Architecture/Service Model

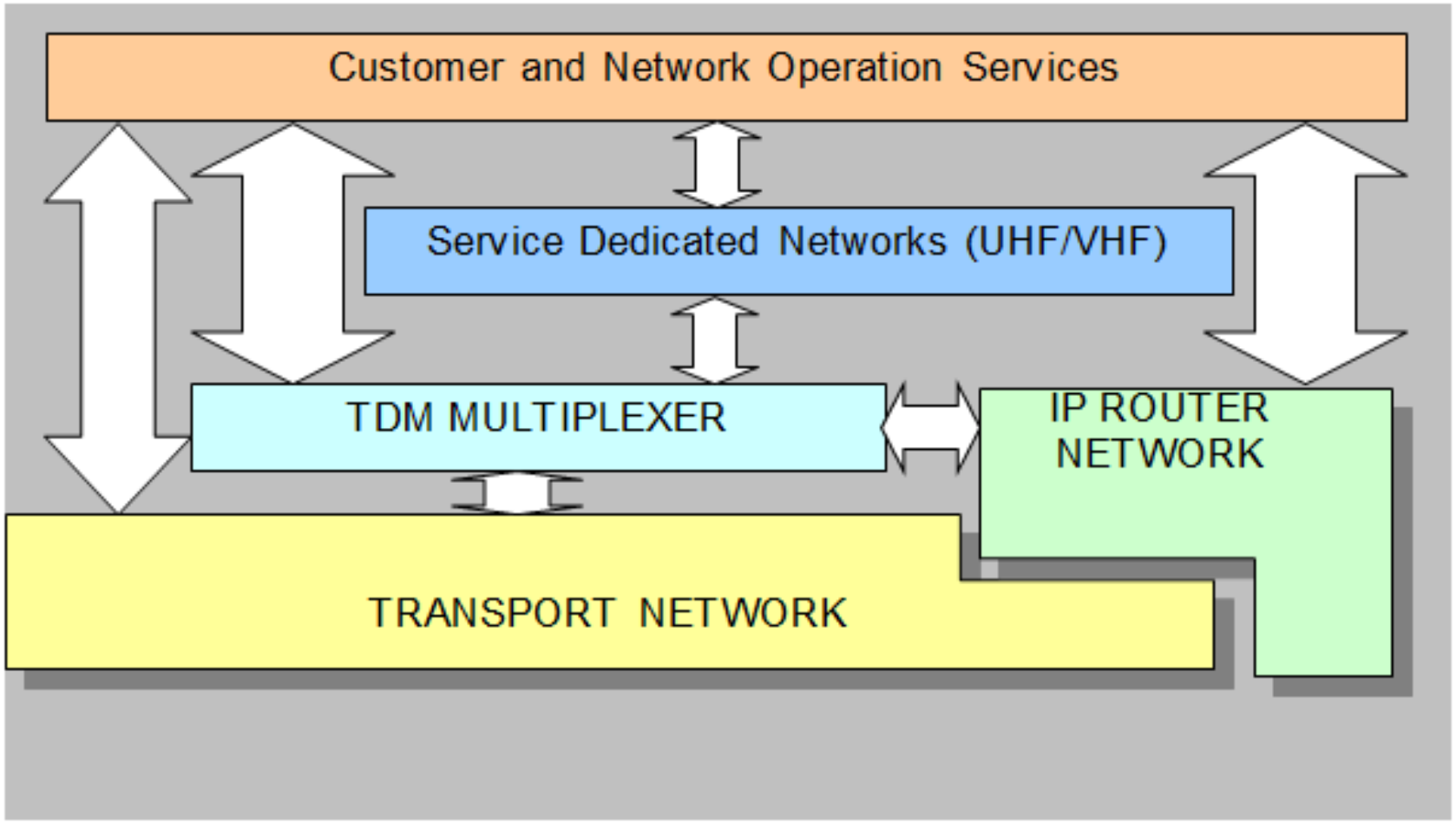

Utility Transport Network Past and Current Situation – TDM Based

- A 3rd-Generation SDH (and PDH) transport network, capable of native TDM transmission, as well as Ethernet transmission over TDM,
- Ethernet frames are transported over TDM pipes by concatenating low order TDM virtual containers to provide the required Ethernet bit rates (albeit with some wastage).
- SDH configured radios, used with ADM (155 Mbit/s (STM-1) to 5 x 155Mbit/s (5 x STM-1)

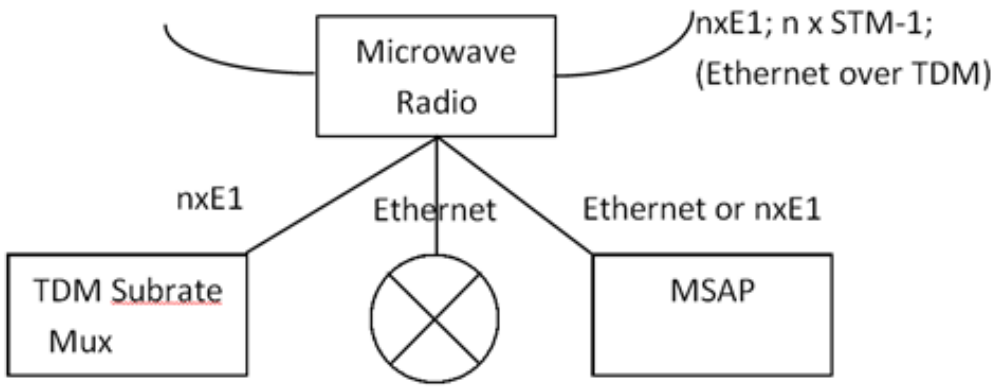

The second type of microwave radio technology is microwave access radio, configured for PDH (and Ethernet over PDH).

Utility Transport Network Current and Near Future Situation – Hybrid TDM/Packet Radio

- Allows for a seamless and phased migration from the legacy TDM network to the future all packet switched network
- Higher and adaptive modulation schemes
  - Increased throughput
  - Class of Service

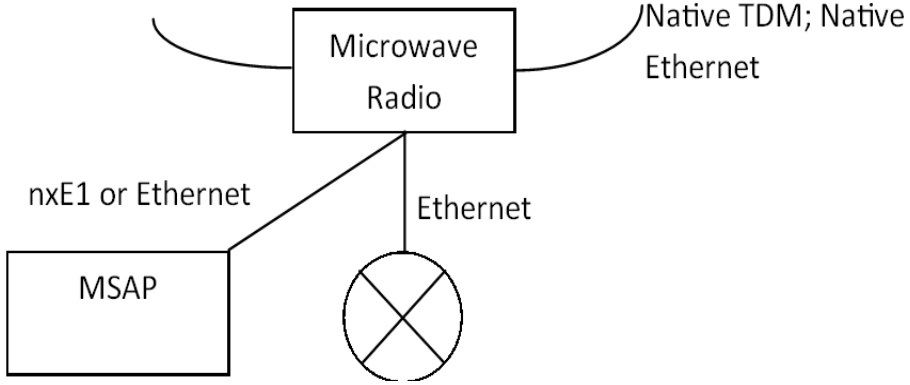

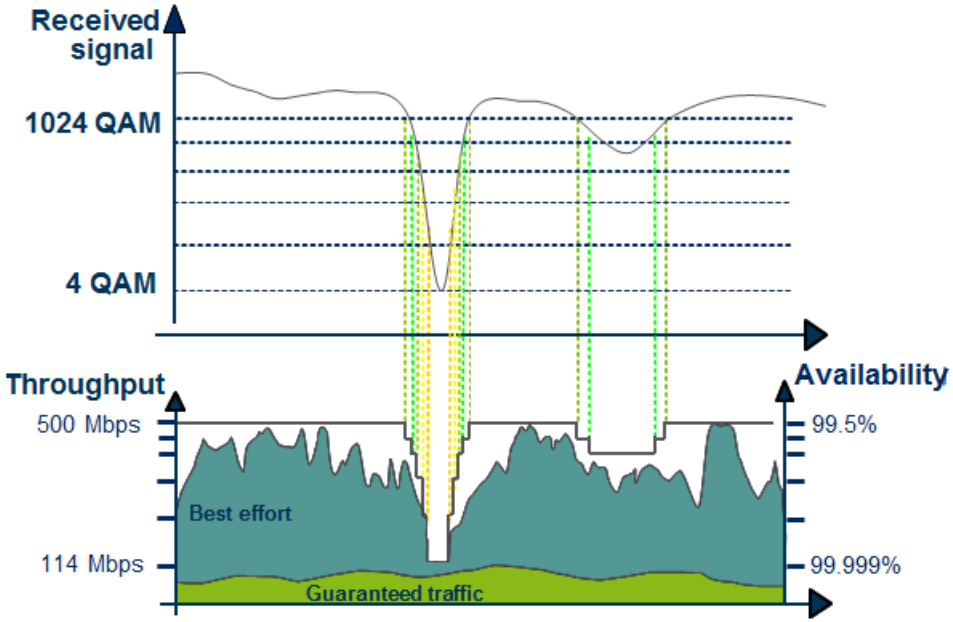

Utility Transport Network Past and Current Situation - Optics

- The highest capacity: STM-16 (2.5 Gbit/s).
- Extended reach capability (with the use of pre and booster amplifiers), to form the core, with up to 200km.
- Ethernet frames are transported over TDM pipes by concatenating low order TDM virtual containers to provide the required Ethernet bit rates (albeit with some wastage).

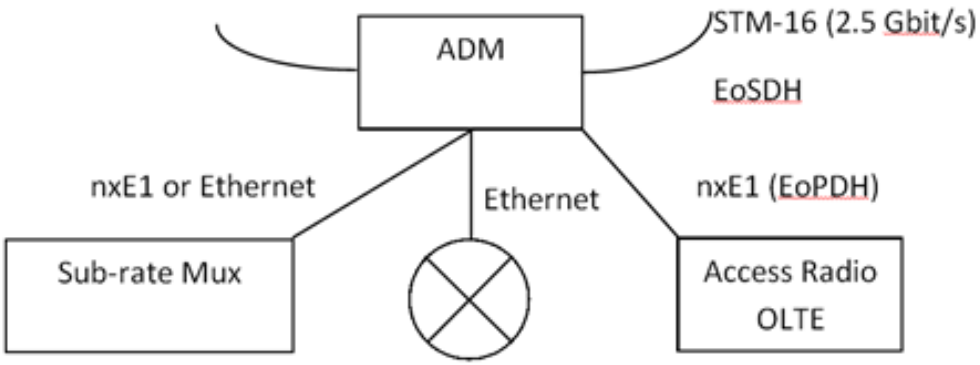

World Trends and Use of Technology: Optical Networking Technology (SDH)

- Traditionally SDH was the de facto telecommunications transport network standard. Further technology development on the SDH standard has halted and SDH is seen as a legacy technology

- Dense wavelength-division multiplexing (DWDM), meets the growing need for efficient and capable data transmission by working natively and transparently with different formats (TDM and Packet), such as SDH, Ethernet, while increasing traffic carrying capacity (bandwidth)

World Trends and Use of Technology: Optical Networking Technology (DWDM/OTN)

- The advantages of Dense Wavelength Division Multiplexing (DWDM) / Optical Transport Network (OTN) include:
  - network transparency: It's protocol, format and bit rate independent
  - large aggregate transmission capacity (up to 100 Gbit/s per wavelength)
  - faster efficiency and data transfer
  - financially more beneficial as it avoids the necessity to lay new fibre cable (or light up new fibre pairs) as it simply increases the efficiency of existing fibre, and
  - Scalability: single- and multi-step multiplexing into higher containers
  - Secure Traffic segregation : OT/IT

DWDM/OTN Multiplexing

Eskom

Future Transport Architecture

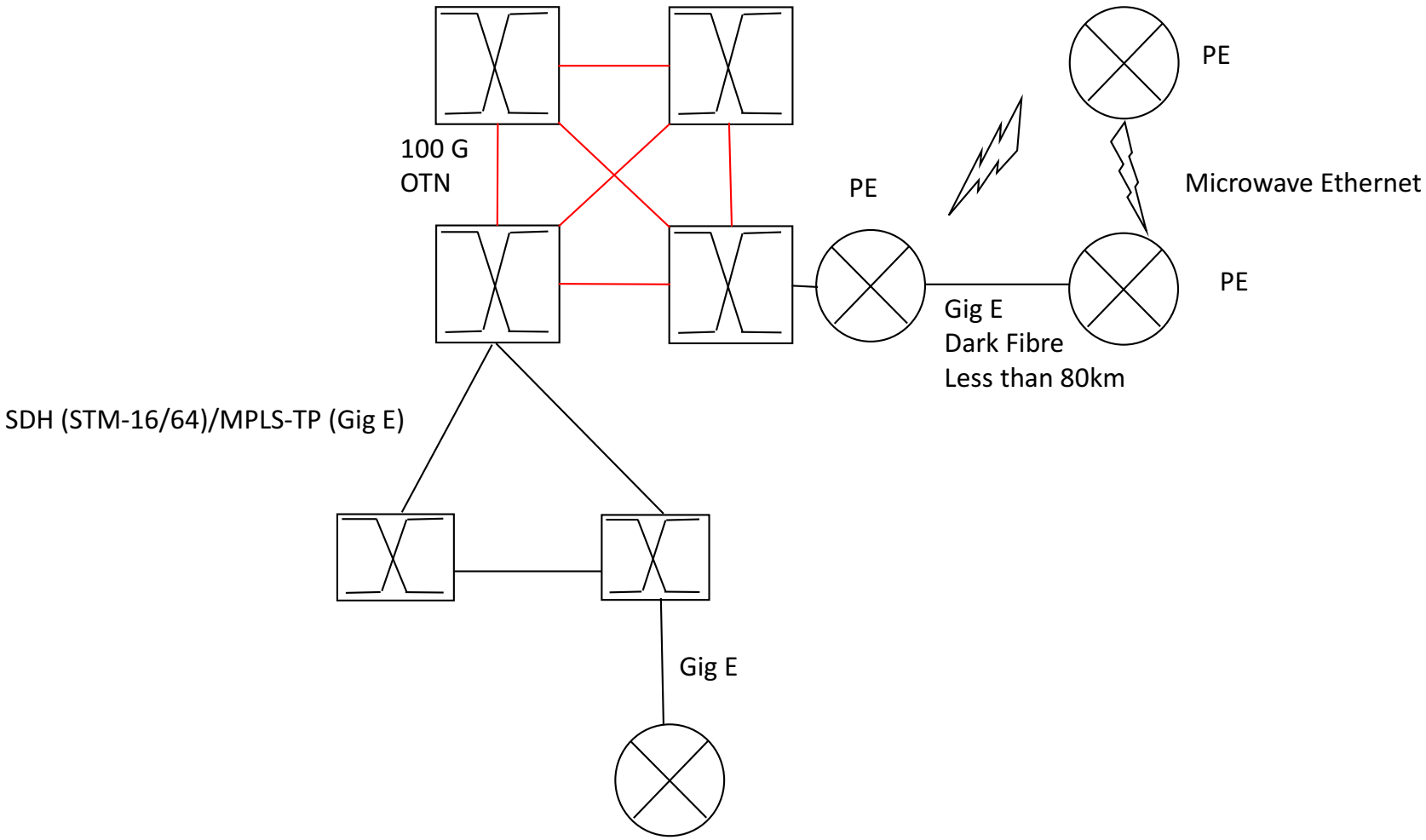

Near Future Service Model/Architecture

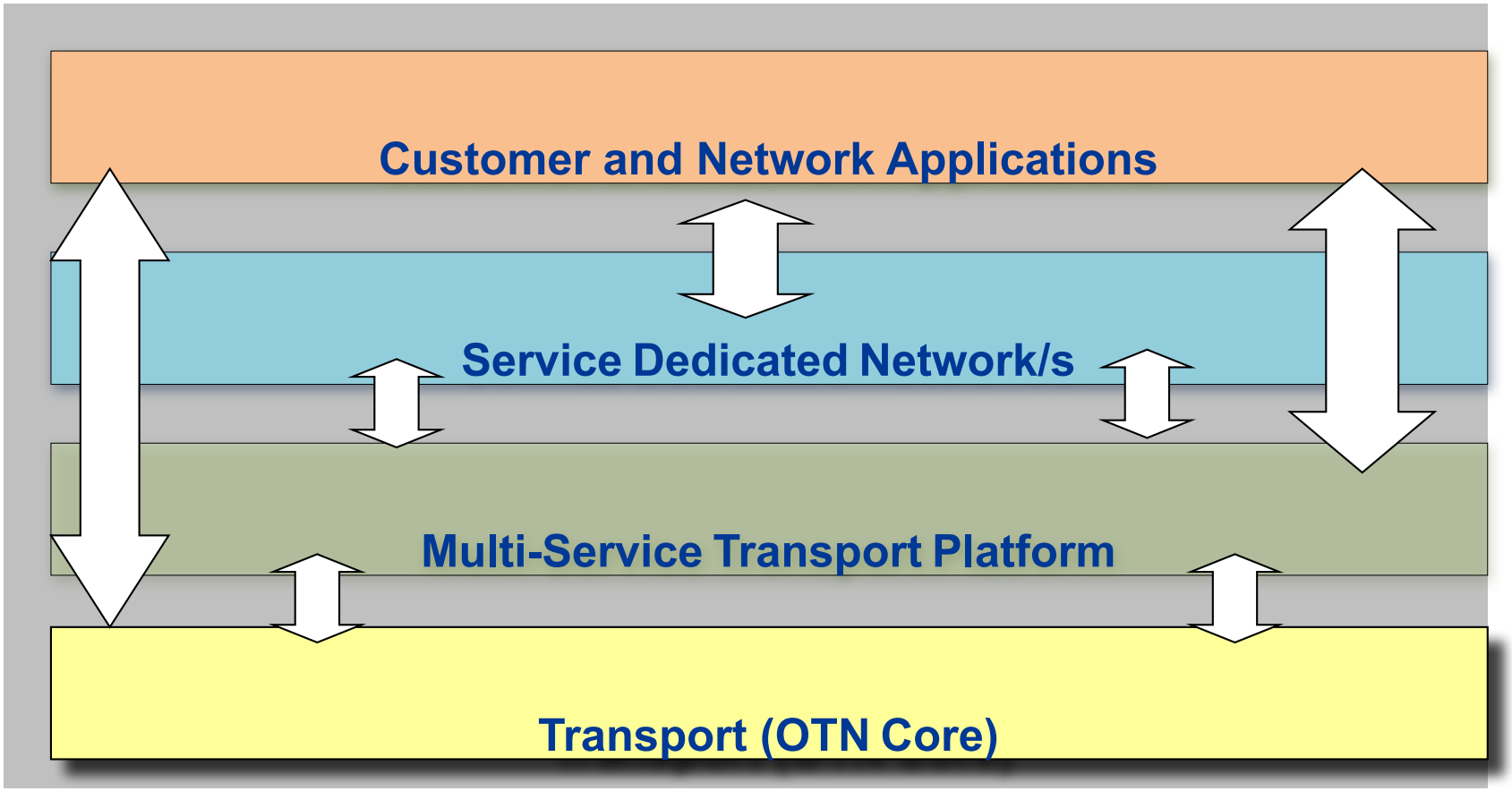

Thank you